Question 1: Ditherington Flax Mill

The flax mill at Ditherington, Shrewsbury, is often described as the world's first iron-framed building. The main spinning mill, designed by engineer Charles Bage, was constructed in 1796-1797 for John Marshall and his partners Thomas and Benjamin Benyon. It was the first building to replace the timber beams of an industrial building with cast iron. The result was a building which uses an iron frame and masonry, with no exposed timber, now a Grade I listed building described by Historic England as 'of outstanding importance in the development of fully-framed, multi-storeyed buildings'.[1] It is interesting that a building which paved the way for steel-framed skyscrapers and modern city architecture was in fact a product of the Industrial Revolution. This essay will comment on the circumstances which brought about Bage's design, describe the successes and flaws of the main elements of the frame, and will discuss the extent of the role which this building performed in the development of the modern skyscraper.

The building's notable features are a direct result of its original purpose as a steam-powered factory, which was intended to be fire-proof. Contemporary mills had flammable timber floors and roofs, a dry and dusty atmosphere, machinery which used volatile oil, and naked flames as lighting. It is altogether unsurprising that mill fires were common. Marshall and the Benyon brothers, who had lost their factory at Water Lane, Leeds, to a fire in 1795, tasked Bage with designing the first fire-proof mill. Bage also needed to construct the main mill with a multi-storeyed structure to maximise floor space, like many mills of the period. The structure had to hold heavy machinery, and be made of affordable materials. Bage was an early innovator interested in using iron for this structure; as a consequence, he embarked on a lot of experimentation to determine whether or not iron was a suitable material. In particular, he needed to analyse the behaviour of cast iron under stress to ensure that a frame could be cast which was strong enough to support the heavy load, but not so inflexible that it could not allow some settling and movement in the building's structure.

The result was the main spinning mill, consisting of five storeys and 18 bays with a working area of 2880 square metres. The iron frame which supports shallow brick arch ceilings has three principal elements: two-piece cast iron transverse beams spanning the building's width, supported by three rows of cast iron columns of a cruciform cross-section, tied by wrought iron tie rods running axially between beams. It was the first mill to integrate these three components into an iron frame.[2] Some of the columns were cast with a rectangular housing at the top, to accommodate for a drive

1 Third floor interior view, 16th November 2000. (courtesy of Historic England)

[1] Historic England, www.historicengland.org.uk/listing/the-list/list-entry/1270576

[2] C. Giles and M. Williams, *Ditherington Mill and the Industrial Revolution,* (England, Historic England, 2015) p. 55

shaft which transmitted power from the steam engine across the mill. As building with iron was still emerging, the metal parts were connected like timber. Joints for beams, columns and tie rods were incorporated in the castings so that the frame could be assembled on site. The ceiling of the mill is made up of inclined brick vaults springing from cast iron beams, supported by a row of off-centre columns, with a wooden A-frame truss built over the top of the masonry. The floors are also brick rather than timber. Consequently, no timber is exposed inside the working area of the mill, leading to it being considered fire-proof. However, there is timber present between the brick walls in the form of a ring beam and pads which support the ends of cast iron beams. Timber was also used for the lintels of the mill's original windows.

Bage had followed some of the first examples of empirical testing to enable his pioneering use of iron. By consulting the records provided to him by fellow industrialist Joseph Reynolds, he found out details about experiments into cast iron's structural properties carried out when designing Thomas Telford's Longdon-on-Tern Aqueduct on the Shrewsbury Canal. He also worked alongside William Hazledine, whose foundry cast the columns and beams used in the mill, to test iron columns under a load to the point of buckling or breakage and hence determine their maximum load. The ability to test materials gave Bage the confidence to use iron innovatively, ultimately resulting in the pioneering iron-framed structure of the spinning mill.

Bage was interested in exploiting the properties of alloys of iron, which was achieved in his design of the spinning mill, as the cast iron columns made use of the alloy's high compressive strength. These columns were situated vertically above each other so that the loads in the centre of the floors could be transmitted directly to the building's foundations. He even enhanced their strength by using a pronounced entasis and a cruciform cross-section for the columns, which was considered the strongest shape of column in the 1790s.[3] Having a cruciform cross-section means that some of the metal is further from the centre of the column, causing the moment of inertia to be larger than if the column was cylindrical for the same volume of iron, and increasing the beam's resistance to bending. This saved cost by creating a column of a compressive strength comparable to a cylindrical column of the same diameter, which would have used a greater volume of iron. Columns increase in cross-sectional area as the storeys decrease because columns close to the ground floor support a greater load, so need a greater compressive strength. The distinctive cross-section served another function: since only destructive testing techniques existed at the time, Bage increased the surface area of the columns by casting them in this shape which improved the chances of builders finding a fault created in casting. In turn, this reduced the chance of faulty columns weakening the structure.

The columns used in the main spinning mill can support a load two and a half times stronger than the maximum determined by Bage in his experiments, but conservation engineers have argued that a safety factor of five times would be preferable.[4] The efficient

[3] C. Giles and M. Williams *Ditherington Mill and the Industrial Revolution,* (England, Historic England, 2015) p. 52

[4] *Mending the Structure* display board at Ditherington flax mill, 2018

design of the columns may have saved money, but it made the structure vulnerable to a disproportionate collapse. Consequently, conservational engineers are now installing a steel grillage across the first floor and six new ground floor columns to provide an alternative load path in the event of the failure of an over stressed cast ion column. The design of the columns was clearly well thought out, enhancing their compressive strength and reducing the chances of a faulty structure. However, it could have been more successful if the columns were designed less economically with a greater cross-sectional area, so that they could support a greater load.

Bage's use of wrought iron to create the tie rods exploits the higher tensile strength of this material over cast iron. Ever since puddling emerged as a technique of mass producing wrought iron in 1784, it had been widely for used for ties in timber roofs or in conjunction with timber beams and brick ceiling vaults. An example of such use is Strutt's Derby Calico Mill, built 1792-1793.[5] The tie rods at Ditherington, which are exposed beneath the ceiling vaults on every floor, secured the structure during its construction and also counteract the horizontal thrust force of the brick arches. However, Bage adapted the tie rods so that they could be used for a cast iron frame for the first time. The rods are one inch square and handmade with different lengths for each bay, and pass through thickened sections of the beam webs where they are fixed in place by metal wedges. Bage considered that the iron may expand and contract with changes in temperature, so included U-shaped connectors in between the rods to account for the iron's potential expansion. The rods pass through the end walls of the building where they are bolted to external wrought iron tie plates. The wrought iron tie rods were largely a successful element of the structure; as a consequence, their use in construction continued for most of the 19th century.

Bage took inspiration from other engineers such as William Strutt, who had built mills which employed cast iron columns, but still had timber beams and floors. Rather than covering transverse beams with plaster or metal plates, fire-proofing methods which were attempted by Strutt, Bage sought to use cast iron as a total substitute for timber. The beams were cast in two parts to make up the full span and joined by a single bolted flange, a method which makes little allowance for movement at the joint. At the beam ends, thick end plates were mounted to the walls and secured in place by an iron pin driven into timber pads inside the core of the wall, meaning that timber on top of brick piers of the inside wall face was responsible for supporting a lot of the load. It is both this lack of allowance for movement and the use of timber in such a high stress area of the building that accounted for a lot of the structural issues which arose.

[5] C. Giles and M. Williams Ditherington Mill and the Industrial Revolution, (England, Historic England, 2015) p.54

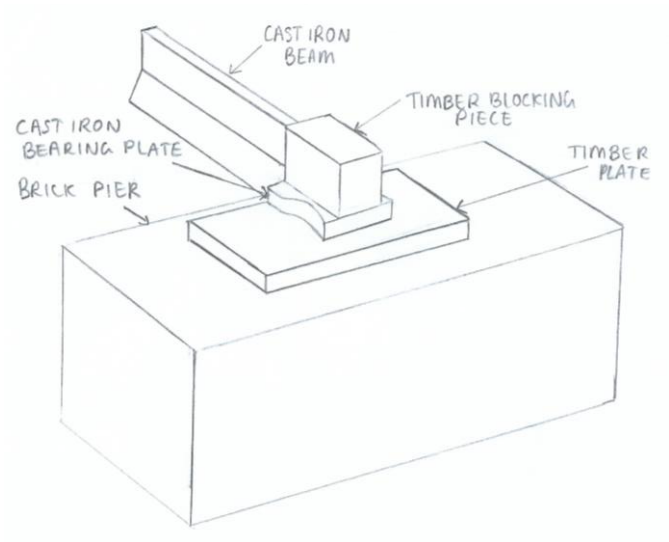

2 Brick Pier which shows the Iron Beam and the Timber Elements

As the first multi-storey mill to employ cast iron beams, it is inevitable that there were some flaws in the beams' design. Firstly, the timber pads and walls support the ends of the beams, which means that the building is not fully framed. As a consequence, differential settlement of the walls down into the ground over a period of two hundred years has increased the load on both ends of the beams. The compressively strong columns inside of the building have supported the middle of the beams well, but the outer edges of the beams have experienced a downwards force due to this settling. The bending moment from the downwards load caused the beams to hog, and has caused cracks the appear from the top of some of the main beams which could cause failure if left to develop to their critical length. Conservation engineers working on the mill have designed a high strength screed to be anchored to the masonry arches which the beams are suspended from, in case of failure of a beam. Two hundred and four tie rods are also being added to provide additional loading capacity by using each brick arch as a masonry truss which spans the building, in an attempt to reduce the load on the beams. However, Bage could have avoided this issue. The beams were cast so that they have a solid bottom flange, making them slightly thicker at the bottom which has successfully prevented cracks originating from the bottom of the beams which could have been caused by sagging. If Bage had also thickened the top of the beams and given them an H-shaped cross-section, this would have prevented or at least delayed the formation of cracks when hogging took place.

Another issue in the building's design is the timber which, although not exposed, was included in the structure to support the ends of the beams. When the building was converted to a maltings in 1897, damp malt which was spread over the floors of the spinning mill seeped moisture into the masonry and eventually the timber. Although Bage could not have known about this future use of the building, the timber was included in external walls, so it was inevitable that it would at least absorb some rainwater. The combination of water and air has since caused this integral wood to rot, resulting in a transfer of loading to the brick outer edges of the wall. The walls began to bulge outwards under this extra load and without conservational scaffolding being installed, they could have collapsed. Engineers are replacing the timber pads with concrete at the high-stress piers of the building, and the steel grillage and extra columns which are being installed should reduce the load on the walls. However, the issue would never have reached such a crisis point if Bage had included vertical iron members inside of the walls, as he considered in his initial stages of designing the mill. The cast iron members would have been a step closer to a full frame, supporting more of the load of the building and reducing the stress on the walls.

Cast iron is also quite resistant to rusting because it has a tough surface skin that forms when it is cooled, so it is unlikely that the same transfer of loading due to support structures rotting away would have occurred.

The alterations made to the flax mill when it was converted to a maltings had further effects, both conservational and detrimental, on the building. Because it was required for rooms to be darkened in the processing of the malt, the original windows were bricked up and a few smaller windows were built in. It is possible that filling in the windows may have increased the strength of the walls and lengthened the lifetime of the building, delaying the discovery of structural faults. Conversely, the re-surfacing of floors on all five levels with concrete to provide a smooth surface for spreading out malt added an excessive load to the building. The structure was put under more stress, which worsened the issues caused by the transfer of loading to the masonry when the timber rotted away.

It is the absence of a full frame in the building, with some of the masonry supporting the load, which causes discussion over whether the main mill at the Ditherington site really is the ancestor of the modern skyscraper. Including the iron members in the wall of the mill would have been a greater step towards a fully metal-framed building for Bage. However, replacing timber beams and floors with incombustible iron and masonry is a significant milestone in itself which did not just influence industrial buildings. It played an important role in the development of skyscrapers, buildings which also require fire-proofing, economical construction, and maximum floor space which can be achieved by building upwards and using a full metal frame.

Whether it is considered to be the direct predecessor of the modern skyscraper or not, Bage's main spinning mill at Ditherington, Shrewsbury, is certainly an important part of structural and civil engineering's history. His use of iron not only made factories safer and more efficient, but also inspired other engineers to create full iron frames which supported the entire load of the building. Bage's ground-breaking design continues to influence our lives through the steel frames supporting the skyscrapers fundamental to modern city architecture.

Bibliography

- Giles, C. and Williams, M. *Ditherington Mill and the Industrial Revolution* England, Historic England, 2015
- *Shrewsbury Flaxmill Maltings, Mending the Structure, Mending the Walls,* and *Mending the Roof* Display boards at Ditherington Flax Mill Visitor Centre, Shrewsbury, 24/02/18

Websites

- BBC Shropshire News, *The mother of all skyscrapers,* 31/05/07, Available at: http://www.bbc.co.uk/shropshire/content/articles/2005/06/29/shrewsbury_flax_mill_feature.shtml (accessed 18/02/18)
- Bussel, M. *19th-century Structural Ironwork in Buildings, Understanding, Care and Re-use,* September 2012, Available at: http://www.buildingconservation.com/articles/structural-ironwork/structural-ironwork.htm (accessed 15/02/18)
- *Ditherington Flax Mill,* 10/09/12, Available at: www.stoneroof.org.uk/historic/Historic_Roofs/Ditherington_Flax_Mill.html (accessed 15/02/18)
- Fitzpatrick, M. *Iron and Steel,* 01/12/05, Available at: http://www.open.edu/openlearn/history-the-arts/history/history-science-technology-and-medicine/history-technology/iron-and-steel (accessed 20/02/18)
- Hill, N. *Flax mill Maltings Restoration Works,* 12/07/17, Available at: www.youtube.com/watch?v=5cfzu-Up5j8 (accessed 21/02/18)
- Historic England, *'Ditherington Flax Mill: Spinning Mill' List Entry Summary,* Available at: www.historicengland.org.uk/listing/the-list/list-entry/1270576 (accessed 20/02/18)
- Institute of Civil Engineers, *Shrewsbury Flax Mill Maltings,* 09/01/18, Available at: www.youtube.com/watch?v=_ouXBdmUEKo (accessed 20/02/18)
- Lewis, P. *Bridges and Buildings: The structures of the Industrial Revolution,* 01/12/05, Available at: http://www.open.edu/openlearn/history-the-arts/history/history-science-technology-and-medicine/bridges-and-buildings-the-structures-the-industrial-revolution (accessed 20/02/18)
- Phelps, M., Paynter, S., and Dungworth, D. English Heritage Research News Issue 17/18 *Puddling, recycling or reheating?,* 2012, Available at: https://content.historicengland.org.uk/images-books/publications/research-news-17-18/RN17_18_web.pdf pp. 26-27 (accessed 20/02/18)
- Smith, M. *Richard Bonella: the Flaxmill Maltings- Shrewsbury U3A (19/01/2015),* 22/01/15, Available at: https://www.youtube.com/watch?v=GZbpa9E5lvc (accessed 20/02/18)
- Williams, M. English Heritage Research News Issue 17/18 *Ditherington Flax Mill: a new beginning for an icon of industry,* 2012, Available at: https://content.historicengland.org.uk/images-books/publications/research-news-17-18/RN17_18_web.pdf pp. 3-9 (accessed 20/02/18)